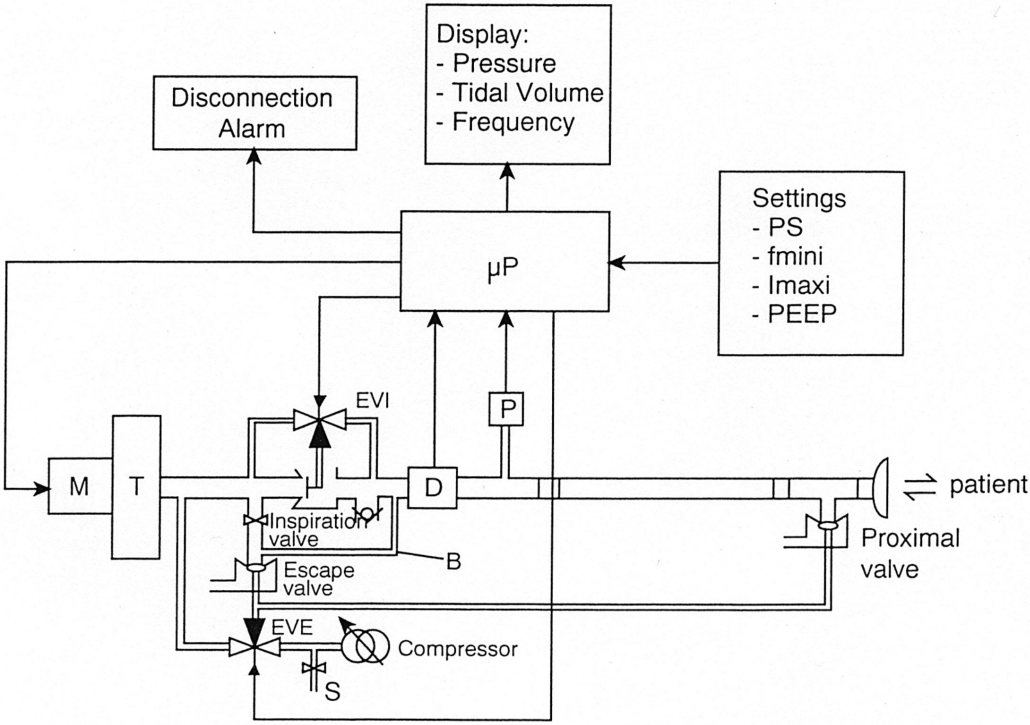
Display:
- Pressure
- Tidal Volume
- Frequency
Disconnection Alarm
Settings
- PS
- fmini
- Imaxi
- PEEP
µP
EVI
P
M
T
D
patient
Inspiration valve
B
Proximal valve
Escape valve
EVE
Compressor
S