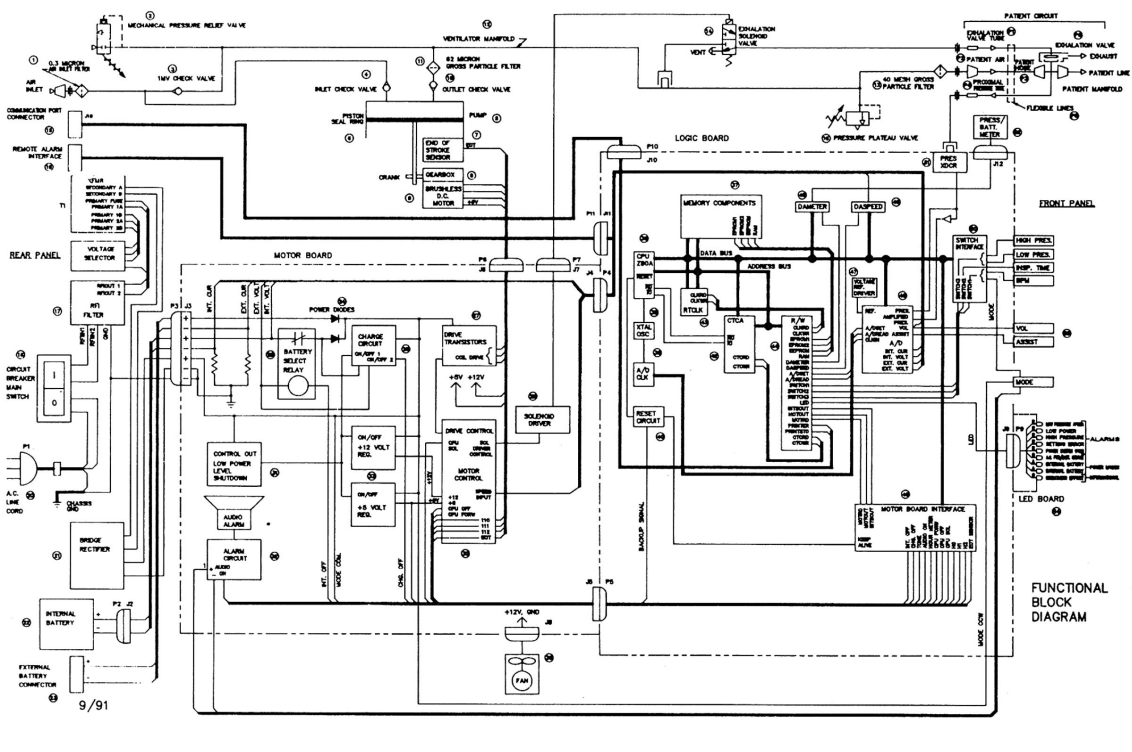
MECHANICAL PRESSURE RELIEF VALVE
0.3 MICRON AIR INLET FILTER
AIR INLET
1WV CHECK VALVE
VENTILATOR MANIFOLD
62 MICRON GROSS PARTICLE FILTER
INLET CHECK VALVE
OUTLET CHECK VALVE
PISTON SEAL RING
PUMP
END OF STROKE SENSOR
CRANK
GEARBOX
BRUSHLESS D.C. MOTOR
EXHALATION SOLENOID VALVE
VENT
PATIENT CIRCUIT
EXHALATION VALVE TUBE
EXHALATION VALVE
PATIENT AIR
PATIENT HOSE
EXHAUST
PATIENT LINE
PATIENT MANIFOLD
PROXIMAL PRESSURE SENSOR
40 MESH GROSS PARTICLE FILTER
FLEXIBLE LINES
PRESSURE PLATEAU VALVE
PRESS/ BATT. METER
COMMUNICATION PORT CONNECTOR
REMOTE ALARM INTERFACE
LOGIC BOARD
PRES SENSOR
FRONT PANEL
MEMORY COMPONENTS
DAMCTER
DASPEED
REAR PANEL
VOLTAGE SELECTOR
RFI FILTER
CIRCUIT BREAKER MAIN SWITCH
MOTOR BOARD
BATTERY SELECT RELAY
POWER DIODES
CHARGE CIRCUIT
DRIVE TRANSISTORS
SOLENOID DRIVER
CONTROL OUT LOW POWER LEVEL SHUTDOWN
ON/OFF +12 VOLT REG.
ON/OFF +5 VOLT REG.
DRIVE CONTROL
MOTOR CONTROL
AUDIO ALARM
ALARM CIRCUIT
BRIDGE RECTIFIER
INTERNAL BATTERY
EXTERNAL BATTERY CONNECTOR
A.C. LINE CORD
CHASSIS GND
+12V, GND
FAN
SWITCH INTERFACE
HIGH PRES.
LOW PRES.
INSP. TIME
BPM
VOL
ASSRT
MODE
LED
ALARMS
LED BOARD
MOTOR BOARD INTERFACE
FUNCTIONAL BLOCK DIAGRAM
9/91